DS-2CD2523G0-I(W)(S)
2 MP IR Fixed Mini Dome Network Camera

Key Features

- 1920 × 1080@30fps
- IR: Up to 10 m
- H.265+. H.265
- 120dB WDR
- Built-in Micro SD/SDHC/SDXC slot, up to 128G
- PoE
- BLC/3D DNR/HLC/ROI
- Wi-Fi (Optional)

Specifications

Camera	
Image Sensor	1/2.7" Progressive Scan CMOS
Min. Illumination	Color: 0.01 Lux @ (F1.2, AGC ON), 0.028 lux @(F2.0, AGC ON), 0 lux with IR
Shutter Speed	1/3 s to 1/100,000 s
Slow Shutter	Yes
Day & Night	IR Cut Filter
Digital Noise Reduction	3D DNR
WDR	120dB
3-Axis Adjustment	Pan: -30° to +30°, tilt: 0° to 75°, rotate: 0° to 360°
Lens	
Focal length	2.8, 4, 6 mm
Aperture	F2.0
FOV	2.8 mm, Horizontal field of view: 114°, Vertical field of view: 62°, Diagonal field of view: 135° 4 mm, Horizontal field of view: 86°, Vertical field of view: 46°, Diagonal field of view: 102° 6 mm, Horizontal field of view: 54°, Vertical field of view: 30°, Diagonal field of view: 62°
Lens Mount	M12
IR	
IR Range	Up to 10 m
Wavelength	850nm
Compression Standard	
Video Compression	Main stream: H.265/H.264 Sub-stream: H.265/H.264 /MJPEG Third stream: H.265/H.264
H.264 Type	Main Profile/High Profile
H.264+	Main stream supports
H.265 Type	Main Profile
H.265+	Main stream supports
Video Bit Rate	32 Kbps to 16 Mbps
Audio Compression	G722.1/G711ulaw/G711alaw/G726/MP2L2/PCM
Audio Bit Rate	64Kbps(G.711)/16Kbps(G.722.1)/16Kbps(G.726)/32-192Kbps(MP2L2)
Smart Feature-set	
Behavior Analysis	Line crossing detection, intrusion detection
Face Detection	Yes
Region of Interest	Support 1 fixed region for main stream and sub-stream separately
Image	
Max. Resolution	1920 × 1080
Main Stream	50Hz:25fps (1920 × 1080, 1280 × 960, 1280 × 720) 60Hz: 30fps (1920 × 1080, 1280 × 960, 1280 × 720)
Sub-Stream	50Hz: 25fps (640 × 480, 640 × 360, 320 × 240) 60Hz: 30fps (640 × 480, 640 × 360, 320 × 240)
Third Stream	50Hz: 25fps (1920 × 1080, 1280 × 720, 640 × 360, 352 × 288) 60Hz: 30fps (1920 × 1080, 1280 × 720, 640 × 360, 352 × 240)
Image Settings	Rotate mode, saturation, brightness, contrast, sharpness and white balance adjustable by client software or web browser
Image Enhancement	BLC/3D DNR/HLC

Day/Night Switch	Auto/Schedule/Day/Night/Triggered by Alarm In (-S)
Network	
Network Storage	Support Micro SD/SDHC/SDXC card (128G), local storage and NAS (NFS,SMB/CIFS), ANR
Alarm Trigger	Motion detection, video tampering, network disconnected, IP address conflict, HDD full, HDD error, illegal login
Protocols	TCP/IP, ICMP, HTTP, HTTPS, FTP, DHCP, DNS, DDNS, RTP, RTSP, RTCP, PPPoE, NTP, UPnP™, SMTP, SNMP, IGMP, QoS, IPv6
General Function	One-key reset, anti-flicker, three streams, heartbeat, mirror, password protection, privacy mask, watermark, IP address filter
Firmware Version	V5.5.80
API	ONVIF (PROFILE S, PROFILE G), ISAPI
Simultaneous Live View	Up to 6 channels
User/Host	Up to 32 users 3 levels: Administrator, Operator and User
Client	iVMS-4200, Hik-Connect, iVMS-5200, iVMS-4500
Web Browser	Plug-in required live view: IE8+, Chrome 41.0-44, Firefox 30.0-51, Safari 8.0-11 Plug-in free live view: Chrome 45.0+, Firefox 52.0+
Interface	
Audio (-S model)	2 Inputs: line in, or mic in (built-in microphone), 1 Output: line out, mono sound, terminal block
Alarm (-S model)	1 Input: Alarm in, 1 Output: Alarm out (max. 12 VDC, 30 mA), terminal block
Communication Interface	1 RJ45 10M/100M self-adaptive Ethernet port
On-board storage	Built-in MicroSD/SDHC/SDXC slot, up to 128G
SVC	Support H.264 and H.265 encoding
Reset Button	Yes
Wi-Fi (-W Model)	
Wireless Standards	IEEE 802.11b/g/n
Frequency Range	2.412 GHz to 2.4835 GHz
Channel Bandwidth	20M/40M
Protocols	802.11b: DQPSK, DBPSK, CCK 802.11g/n: OFDM /64-QAM,16-QAM, QPSK, BPSK
Security	WPA, WPA2
Transfer Rates	11b: 11Mbps, 11g: 54Mbps, 11n: up to 150Mbps
Wireless Range	50 m
Audio (-S model)	
Environment Noise Filtering	Yes
Audio Sampling Rate	8 kHz/16 kHz/32 kHz/44.1 kHz/48 kHz
General	
Operating Conditions	-30 °C to +60 °C (-22 °F to +140 °F), Humidity 95% or less (non-condensing)
Power Supply	12 VDC ± 25%, PoE (802.3af, class 3)
Power Consumption and Current	12 VDC, 0.7 A, max. 8.5 W, Φ 5.5mm coaxial plug power PoE (802.3af, 36 V to 57 V), 0.3 A to 0.1 A, max. 10 W
Protection Level	IK08, IP66
Material	Front cover: plastic, Bottom base: metal
Dimensions	Φ110 mm × 56.4 mm (Φ4.3" × 2.2")

Weight	Camera: Approx. 400 g (0.9 lb.)

Available Model

DS-2CD2523G0-I (2.8/4/6 mm), DS-2CD2523G0-IS (2.8/4/6 mm),
DS-2CD2523G0-IW (2.8/4/6 mm), DS-2CD2523G0-IWS (2.8/4/6 mm)

Dimension

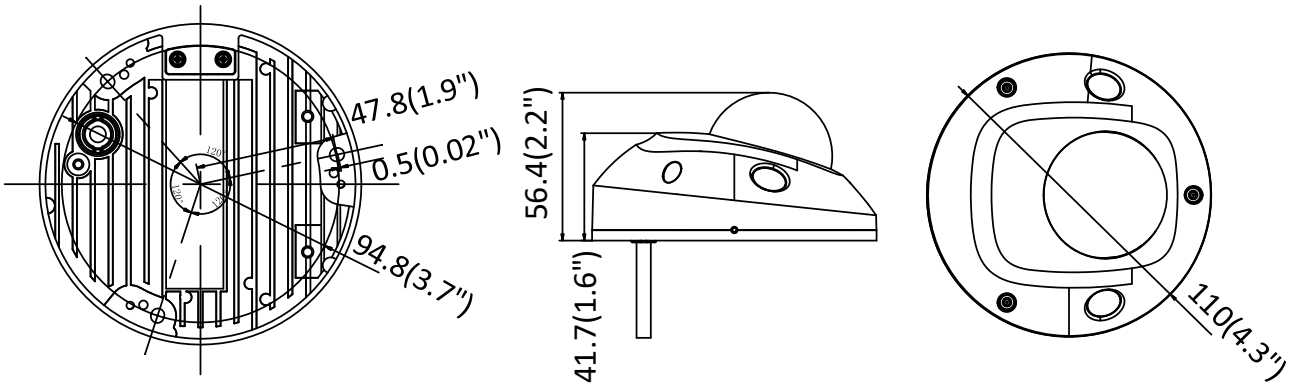

Accessory

DS-1280ZJ-DM46
Junction Box

DS-1280ZJ-DM46(Black)
Junction Box

Distributed by

Headquarters
No.555 Qianmo Road, Binjiang District,
Hangzhou 310051, China
T +86-571-8807-5998
overseasbusiness@hikvision.com

Hikvision USA
T +1-909-895-0400
sales.usa@hikvision.com

Hikvision Europe
T +31-23-5542770
sales.eu@hikvision.com

Hikvision UK & Ireland
T +01628-902140
sales.uk@hikvision.com

Hikvision UAE
T +971-4-4432090
salesme@hikvision.com

Hikvision Russia
T +7-495-669-67-99
saleru@hikvision.com

Hikvision Australia
T +61-2-8599-4233
salesau@hikvision.com

Hikvision Italy
T +39-0438-6902
info.it@hikvision.com

Hikvision South Africa
Tel: +27 (10) 0351172
sale.africa@hikvision.com

Hikvision Singapore
T +65-6684-4718
sg@hikvision.com

Hikvision Korea
T +82-(0)31-731-8817
sales.korea@hikvision.com

Hikvision India
T +91-22-28469900
sales@pramahikvision.com

Hikvision Brazil
T +55 11 3318-0050
Latam.support@hikvision.com

Hikvision France
T +33(0)1-85-330-450
info.fr@hikvision.com

Hikvision Spain
T +34-91-737-16-55
info.es@hikvision.com

Hikvision Poland
T +48-22-460-01-50
info.pl@hikvision.com

Hikvision Canada
T +1-866-200-6690
sales.canada@hikvision.com

Hikvision Turkey
T +90 (216)521 7070- 7074
sales.tr@hikvision.com

Hikvision Kazakhstan
T +7-727-9730667
nikia.panfilov@hikvision.ru

Hikvision Tashkent
T +99-87-1238-9438
uzb@hikvision.ru

Hikvision Indonesia
T +62-21-2933759
Sales.Indonesia@hikvision.com

Hikvision Thailand
T +662-275-9949
sales.thailand@hikvision.com

Hikvision Malaysia
T +601-7652-2413
sales.my@hikvision.com

Hikvision Vietnam
T +84-974270888
sales.vt@hikvision.com

Hikvision Hong Kong
T +852-2151-1761
info.hk@hikvision.com

Hikvision Colombia
sales.colombia@hikvision.com

05058020181207

© Hikvision Digital Technology Co., Ltd. 2018 | Data subject to change without notice |